Electric strike 143.23

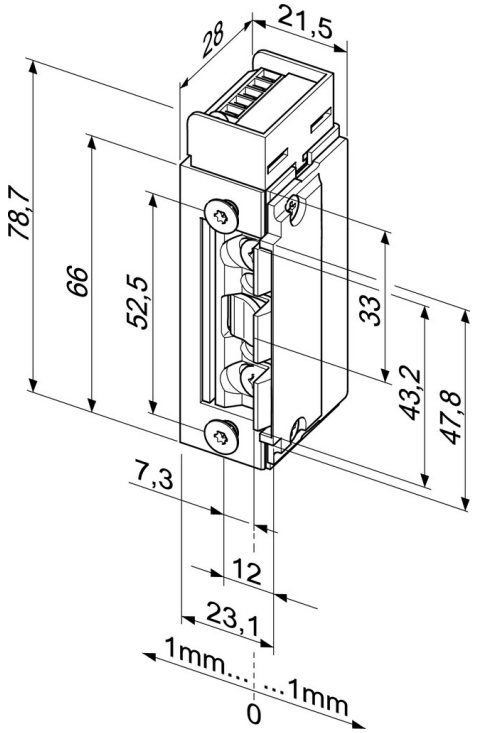

Product description

Model with monitoring contact as potential-free changeover contact. This is actuated by the latch bolt via a slide.

Can also be used as a high-security strike

Overview of Advantages

- Radius keeper, FaFix®, adjustable by 2 mm
- 12-24 Volt voltage range for AC and DC operation
- New connection technology, can be replugged
- Resistant to continuous current across the entire voltage range
- All models can be fitted as required (right-hand/left-hand/horizontally)
- Integrated surpressor diode
- Preload modes 400N or 800N can be set

Technical data

Adjustable keeper (FF, FaFix®)	Yes
Monitoring contact (RR)	Yes
Fail-locked	Yes
TVS diode	Yes
Changeable connection	Yes
Max. pre-load	400 N / 800 N
Break-in resistance	8000 N
Height	79 mm
Width	23 mm
Depth	28 mm
FaFix® adjustment range	2 mm
Latch bolt engaging depth	6 mm
Operating temperature range	-15 °C to +40 °C
Continuous function load cycles	200000
Load cycles for in-plant test	500000
Suitable for fire doors	Yes
Installation position	Vertical and horizontal
Certified in compliance with	EN 14846:2008
VdS class	Class B

Variants that can be ordered

Order number	Description
143.23------Q34	Without striking plate, 12/24 V AC/DC eE
143.23------Q35	Without striking plate, 12/24 V AC/DC eE

ASSA ABLOY Sicherheitstechnik GmbH
Bildstockstraße 20, 72458 Albstadt
Tel. + 49 7431/123-0, Albstadt@assaabloy.com
www.assaabloy.com/de