Strike plate - - - - - - - 68935- 01

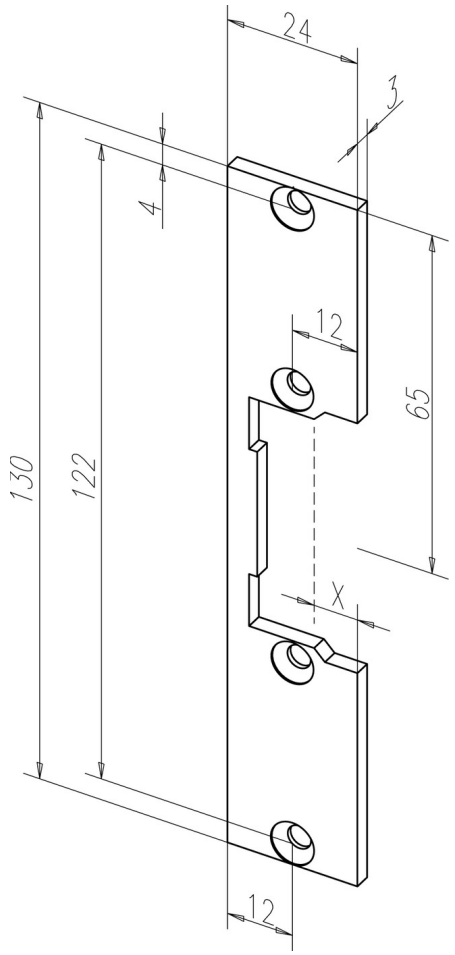

Product description

Short flat striking plate with latch bolt aperture.

Overview of Advantages

- DIN left and right usable
- For conventional effeff ProFix®2 electric strike models

Technical data

Length	130 mm
Width	24 mm
Thickness	3 mm
Colour	Stainless steel

Article number	-------68935-01
EAN	4042203334793

ASSA ABLOY Sicherheitstechnik GmbH
Bildstockstraße 20, 72458 Albstadt
Tel. + 49 7431/123-0, Albstadt@assaabloy.com
www.assaabloy.com/de